INGROUND TITUS 9W IP67 IK09 EN60598 CE

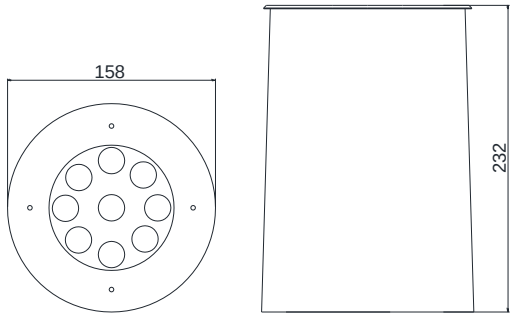

APPLICATION

LED high-performance ingrounds with wide & narrow beam light distribution.

PRODUCT DESCRIPTION

Inground made of aluminium die cast, Aluminium and stainless steel.
Clear 6mm safety glass
Silicon base seal gasket
Mounting bracket made of plastic.
Electrostatic powder coating.
Lens angle 30°- 50°
Colour standard 7040
Optional RAL codes.
LED power supply unit
Input 110 – 240V AC 50 / 60 Hz
Power factor > 90% full load
DALI controllable (optional)
0-10V / 1-10V controllable (optional)
Safety class I
Protection class IP67
Impact strenght IK09
Operation temperature -25°C / +55°C
Weight: 2 kg
Complies with European standards EN 60598 and CE certificate.
CE -- Conformity mark.

LAMPS

Module connected wattage	9W
Luminaire connected wattage	12W
Rated temperature	t^a = 25 °C
Ambient temperature	t^a max = 35 °C
If the power is reduced, the max ambient temperature will increase. To min.	55 °C

NW

Module designation	10R0095NC-9
Colour temperature	4000K
Colour rendering index	R^a>80
Module luminous flux	1305 lm
Luminaire luminous flux	1107 lm
Luminaire luminous efficiency	123 lm / W

WW

Module designation	10R0095NC-9
Colour temperature	3000K
Colour rendering index	R^a>80
Module luminous flux	1260 lm
Luminaire luminous flux	1053 lm
Luminaire luminous efficiency	117 lm / W

Standard colour temperature 4000K
Also available with 3000K on request.

BAYLED TEKNOLOJİ A.Ş.
Ahi Evran Mah. 225. Cad. No:84
06935, Sincan ANKARA / TURKEY
T: +90 312 395 76 35
F: +90 312 395 73 65
info@bayled.com.tr

Bayled All right reserved

We reserve the right to change specifications without prior written notice.
Edition: 03.05.2016
Current version under:
www.bayled.com.tr
Bayled is a Baytaş group brand.