FLOODLIGHT RIVA 300W IP66 IK09 EN60598 CE

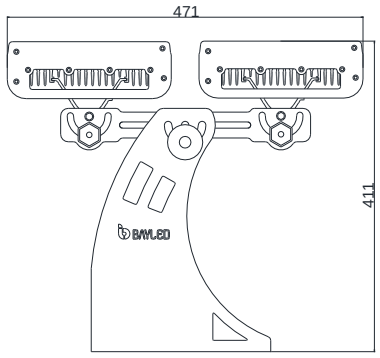

APPLICATION

LED high-performance floodlights with wide & narrow beam light distribution.

PRODUCT DESCRIPTION

Floodlight made of aluminium alloy, Aluminium and stainless steel.
Clear 5mm safety glass
Silicon rubber gasket
Swivel range 120°
Mounting bracket made of steel with electrostatic powder coating.
Lens angle 8°- 25°- 45°- 60°
Colour standard 7040
optional RAL codes.
LED power supply unit
Input 100 – 305V AC 50 / 60 Hz
Power factor > 90% full load
6kV surge protection
DALI controllable (optional)
0-10V / 1-10V controllable (optional)
DMX 512 (optional)
Safety class I
Protection class IP66
Impact strenght IK09
Operation temperature -25°C / +55°C
Wind catching area: 0,42m2
Weight: 19,4 kg
EULUMDAT files available
Complies with European standards EN 60598 and CE certificate.
CE -- Conformity mark.

LAMPS

Module connected wattage	300W
Luminaire connected wattage	320W
Rated temperature	t^a = 25 °C
Ambient temperature	t^a max = 35 °C

If the power is reduced, the max ambient temperature will increase. To min. 55 °C

NW

Module designation	10S170250NF-36
Colour temperature	4000K
Colour rendering index	R^a>80
Module luminous flux	31680 lm
Luminaire luminous flux	25718 lm
Luminaire luminous efficiency	90 lm / W

WW

Module designation	10S170250NF-36
Colour temperature	3000K
Colour rendering index	R^a>80
Module luminous flux	30500 lm
Luminaire luminous flux	24310 lm
Luminaire luminous efficiency	88 lm / W

Standard colour temperature 4000K
Also available with 3000K on request.

Accessories
Anti-Glare Diffusers

BAYLED TEKNOLOJİ A.Ş.
Ahi Evran Mah. 225. Cad. No:84
06935, Sincan ANKARA / TURKEY
T: +90 312 395 76 35
F: +90 312 395 73 65
info@bayled.com.tr

Bayled All right reserved

We reserve the right to change specifications without prior written notice.
Edition: 03.05.2016
Current version under:
www.bayled.com.tr
Bayled is a Baytaş group brand.